PRESSURE FILTER, change-over
Series HDD 170 - 450 DN 40 PN 315

Sheet No.
2514 O

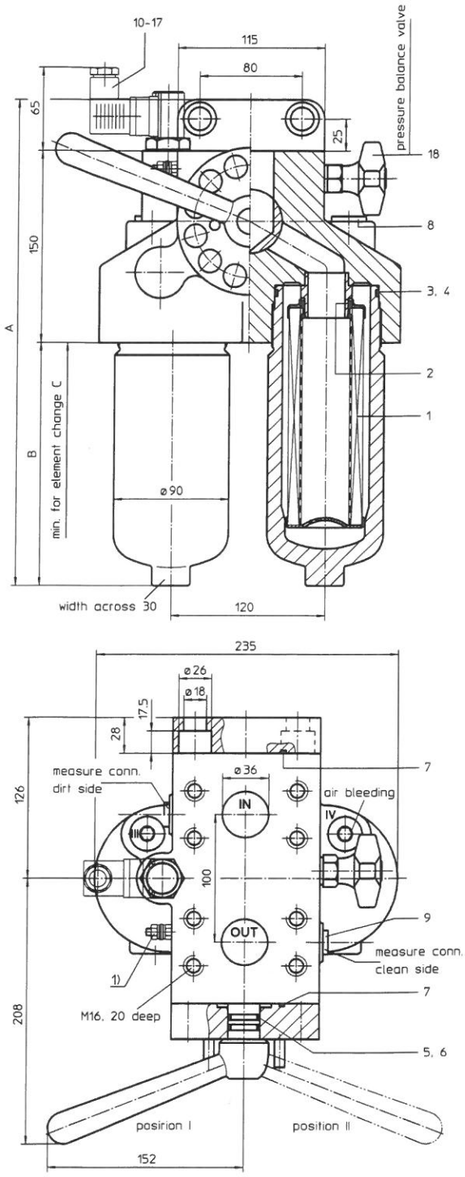

Pos. I: left filter-side in operation
Pos. II: right filter-side in operation

Connection III and IV to be used to bleed filter or to relieve pressure

1) connection for the potential equalisation, only for the application in the explosive area

1. Type index:

1.1. Complete filter: (ordering example)

HDD. 170. 10VG. HR. E. P. -. FS. 7. -. -. AE
1 | 2 | 3 | 4 | 5 | 6 | 7 | 8 | 9 | 10 | 11 | 12

1 **series:**
HDD = pressure filter, change-over

2 **nominal size:** 170, 240, 360, 450

3 **filter-material and filter- fineness:**
25 VG = 20 $\mu m_{(C)}$, 16 VG = 15 $\mu m_{(C)}$, 10 VG = 10 $\mu m_{(C)}$,
6 VG = 7 $\mu m_{(C)}$, 3 VG = 5 $\mu m_{(C)}$ Interpor fleece (glass fibre)

4 **resistance of pressure difference for filter element:**
30 = Δp 30 bar
HR = Δp 160 bar (rupture strength Δp 250 bar)

5 **filter element design:**
E = single-end open

6 **sealing material:**
P = Nitrile (NBR)
V = Viton (FPM)

7 **filter element specification:**
- = standard
VA = stainless steel

8 **connection:**
FS = SAE-flange connection 6000 PSI

9 **connection size:**
7 = 1 ½"

10 **filter housing specification:**
- = standard

11 **internal valve:**
- = without
S1 = with by-pass valve Δp 3,5 bar
S2 = with by-pass valve Δp 7,0 bar
R = reversing valve, Q ≤ 211,008 l/min

12 **clogging indicator or clogging sensor:**
- = without
AOR = visual, see sheet-no. 1606
AOC = visual, see sheet-no. 1606
AE = visual-electrical, see sheet-no. 1615
VS1 = electronical, see sheet-no. 1617
VS2 = electronical, see sheet-no. 1618

1.2. Filter element: (ordering example)

01E. 170. 10VG. HR. E. P. -
1 | 2 | 3 | 4 | 5 | 6 | 7

1 **series:**
01E. = filter element according to company standard

2 **nominal size:** 170, 240, 360, 450

3 - 7 see type index-complete filter

2. Accessories:

- measure- and bleeder connection, see sheet-no. 1650

3. Dimensions:

type	connection	A	B	C	weight kg	volume tank
HDD 170	SAE 1 ½"	380	190	350	39	2x 0,7 l
HDD 240		430	240	400	41	2x 0,9 l
HDD 360		510	320	480	45	2x 1,2 l
HDD 450		615	425	585	50	2x 1,6 l

Changes of measures and design are subject to alteration!